A VANET-INTEGRATED MULTI-SENSOR FRAMEWORK FOR REAL-TIME ROAD SURFACE ANAMOLY DETECTION AND VEHICLE HEALTH PROGNOSTICS IN INTELLIGENT TRANSPORTATION SYSTEMS.

A PROJECT REPORT

Submitted by

ABINAYASHREE P (210622106002)

JAYASRI D (210622106025)

GOPIKA S (210622106018)

In partial fulfillment for the award of the degree of

BACHELOR OF ENGINEERING

IN

ELECTRONICS AND COMMUNICATION ENGINEERING

JEPPIAAR INSTITUTE OF TECHNOLOGY, SRIPERUMBUDUR,

(An Autonomous Institution)

CHENNAI

ANNA UNIVERSITY: CHENNAI 600 025

MARCH 2026

BONAFIDE CERTIFICATE

Certified that this project report **"A VANET-INTEGRATED MULTI-SENSOR FRAMEWORK FOR REAL-TIME ROAD SURFACE ANAMOLY DETECTION AND VEHICLE HEALTH PROGNOSTICS IN INTELLIGENT TRANSPORTATION SYSTEMS "** is the bonafide work of **JAYASRI D (210622106025), A B I N A Y A S H R E E P (210622106002), G O P I K A S (210622106018)** who carried out the project work under my supervision.

SIGNATURE	**SIGNATURE**
Dr. T. SRIPRIYA , M.E.,Ph.D,	**Dr. W. NANCY, M.E., Ph.D.,**
HEAD OF THE DEPARTMENT	**SUPERVISOR**
ASSOCIATE PROFESSOR	**ASSISTANT PROFESSOR**
Department of ECE	Department of ECE
Jeppiaar Institute of Technology	Jeppiaar Institute of Technology

Submitted for University Examination held on _____at Jeppiaar Institute of Technology.

INTERNAL EXAMINER	**EXTERNAL EXAMINER**

ACKNOWLEDGEMET

We wish to express our sincere gratitude to parents for valuable help, cooperation and encouragement during this project work.

Our sincere thanks to Chairman **Dr. N. MARIE WILSON, B.Tech, MBA., Ph.D.,** Jeppiaar Institute of Technology for facilitating us to do this project and we were grateful to him for being a source of inspiration. We sincerely thank **Dr. J. VENU GOPALA KRISHNAN,M.Tech., F.I.E., Ph. D.** Principal, Jeppiaar Institute of Technology for encouraging our endeavors for this project.

We sincerely thank **Dr. T.SRIPRIYA, M.E., Ph.D.,** Associate Professor and Head of Department, Department of ECE, Jeppiaar Institute of Technology for her support throughout the review.

We are grateful to our project co-ordinator and internal guide **Dr.W.NANCY,M.E.,Ph.D.,** Assistant Professor, Department of ECE, Jeppiaar Institute of Technology for her valuable suggestions for our project.

We also wish to extend our sincere thanks to all the committee members for their constant support throughout the review.

Last but not the least, we wish to express our sincere thanks to the entire teaching faculty and non-teaching staffs for their support and suggestions in helping us successfully to complete this project.

ABSTRACT

This project presents a VANET-based road surface detection and vehicle health monitoring system designed to enhance safety through real-time vehicle-to-vehicle communication. The proposed prototype consists of a Bluetooth-controlled rover acting as the transmitter node, powered by a battery and equipped with multiple sensors for comprehensive monitoring. An ultrasonic sensor is integrated for obstacle and pothole detection, while an IR sensor identifies road cracks with precision. For vehicle health assessment, temperature, sound, and vibration sensors continuously monitor critical operational parameters. All sensor readings are displayed on an onboard LCD screen for instant visualization. When any measured value exceeds a predefined threshold, the system activates a buzzer to alert the driver. Additionally, if the rover detects an obstacle, pothole, crack, or any hazardous road condition, it transmits an alert signal using an RF transmitter as part of the VANET communication framework. The receiver module, installed in a following vehicle, contains an RF receiver, LCD display, and buzzer. Upon receiving the transmitted alert, it immediately notifies the driver about the detected threat through an audio alert and visual indication, enabling timely corrective action. This integrated VANET-enabled system ensures improved road safety, proactive hazard awareness, and effective inter-vehicle communication for accident prevention and smart transportation application

TABLE OF CONTENT

CHAPTER NO.	TITLE	PAGENO.
	ABSTRACT	I
	TABLE OF CONTENT	II
	LIST OF FIGURES	VII
	LIST OF ABBREVATIONS	VIII
1	**INTRODUCTION**	1
	1.1 BACKGROUND OF STUDY	1
	1.2 NEED FOR VANET BASED ROAD SAFETY SYSTEM	2
	1.3 OVERVIEW OF THE PROPOSED SYSTEM	3
	1.31 TRANSMITTER NODE	3
	1.32 RECEIVER NODE	4
	1.4 MOTIVATION OF THE PROJECT	4
	1.5 OBJECTIVE OF PROJECT	5
	1.6 SCOPE OF THE PROJECT	5
	1.7 SIGNIFICANCE OF STUDY	5
2	**LITERATURE SURVEY**	7
	2.1 UTILIZE DATA AUGMENTATION AND FLEXI CORNER BLOCK FOR	7

ROAD DAMAGE DETECTION

2.2 RADNET: ADAPTIVE SPATIAL-DILATION LEARNING FOR EFFICIENT ROAD CRACK DETECTION 8

2.3 YOLOV8 SEGMENTATION FOR DETECTING UNSTRUCTURED ROAD BOUNDARIES 8

2.4 ROAD MARKING SIGN DAMAGE DETECTION USING DEEP LEARNING AND FUZZY LOGIC 9

2.5 AUTOMATED DETECTION OF ROAD DEFECTS USING LSTM AND RANDOM FOREST 10

2.6 AUTONOMOUS ROAD DEFECTS SEGMENTATION USING TRANSFORMER-BASED DEEP LEARNING MODELS WITH CUSTOM DATASET 10

2.7 ROAD CRACK DETECTION AND ORIENTATION ESTIMATION USING AIRBORNE SYNTHETIC APERTURE RADAR 11

2.8 ROADFORMER: LOCAL-GLOBAL FEATURE FUSION FOR ROAD SURFACE CLASSIFICATION IN AUTONOMOUS DRIVING 12

2.9 MACHINE LEARNING MODEL FOR ROAD ANOMALY DETECTION USING SMARTPHONE ACCELEROMETER DATA 13

	2.10 FAMNET: LIGHTWEIGHT ROAD EXTRACTION NETWORK WITH FUSED ATTENTION AND MULTILEVEL CASCADED ASPP.	14
3	**SYSTEM DESIGN**	16
	3.1 OVERVIEW OF THE SYSTEM	16
	3.2 HARDWARE COMPONENTS	17
	3.2.1 MICROCONTROLLER UNIT	17
	3.2.2 ULTRASONIC SENSOR	19
	3.2.3 IR SENSOR	19
	3.2.4 TEMPERATURE SENSOR	21
	3.2.5 SOUND SENSOR	21
	3.2.6 VIBRATION SENSOR	22
	3.2.7 RF TRANSMITTER AND RECEIVER	22
	3.2.8 LCD DISPLAY	22
	3.2.9 BUZZER	23
	3.2.10 BLUETOOTH MODULE AND ROVER PLATFORM	23
	3.3 SOFTWARE COMPONENTS	24
	3.3.1 EMBEDDED FIRMWARE	24
	3.3.2 COMMUNICATION PROTOCOL	24

3.3.3 CONTROL LOGIC 24

3.4 DATA ACQUISITION 25

3.4.1 SOFTWARE REQUIREMENTS 25

4 IMPLEMENTATION 27

4.1 SYSTEM SETUP AND INTEGRATION 27

4.2 SENSOR INTERFACING AND CALIBRATION 28

4.3 MICROCONTROLLER PROGRAMMING AND LOGIG DEVELOPMENT 29

4.4 RF COMMUNICATION AND VANET MESSAGE TRANSMISSION 30

4.5 LCD DISPLAY AND USER ALERT MECHANISM 31

4.6 BLUETOOTH BASED ROVER CONTROL AND TESTING 31

4.7 RECEIVER MODULE IMPLEMENTATION 32

4.8 SYSTEM TESTING ,VALIDATION AND PERFORMANCE EVALUATION 32

5 RESULT AND DISCUSSION 34

5.1 EXPERIMENTAL SETUP AND TEST ENVIRONMENT 34

5.2 ROAD SURFACE DETECTION PERFORMANCE 34

5.3 VEHICLE HEALTH MONITORING ACCURACY 35

5.4 RF COMMUNICATION AND VANET ALERT TRANMISSION 35

5.5 ALERT RESPONSE TIME AND DRIVER NOTIFICATION 36

5.6 COMPARATIVE DISCUSSION WITH CONVENTIONAL SYSTEM 36

5.7 SYSTEM LIMITATIONS AND OBSERVATIONS 37

5.8 OVERALL DISCUSSION AND INTERPRETATION OF RESULTS 37

REFERENCES 38

LIST OF FIGURES

FIGURE NO.	TITLE	PAGENO.
3.2	HARDWARE ARCHITECTURE	17
3.2.1.A	ARDUINO PIN DIAGRAM	18
3.2.1.B	MICROCONTROLLER	18
3.2.2	ULTRASONIC SENSOR	19
3.2.3.A	IR CIRCUIT	20
3.2.3.B	IR SENSOR	21
3.2.4	TEMPERATURE SENSOR	21
3.2.7	RF TRANSMITTER AND RECEIVER	22
3.2.8	LCD DISPLAY	22
3.2.9	BUZZER	23
3.2.10	BLUETOOTH MODULE	23
4.2	FLOW DIAGRAM	29
5.8	VANET SYSTEM	37

LIST OF ABBREVIATIONS

VANET	VEHICULAR AD-HOC NETWORK
ITS	INTELLIGENT TRANSPORTATION SYSTEM
V2V	VEHICLE-TO-VEHICLE COMMUNICATION
RF	RADIO FREQUENCY
MCU	MICROCONTROLLER UNIT
LCD	LIQUID CRYSTAL DISPLAY
IR	INFRARED
ADC	ANALOG-TO-DIGITAL CONVERTER
GPS	GLOBAL POSITIONING SYSTEM
IOT	INTERNET OF THINGS
ADAS	ADVANCED DRIVER ASSISTANCE SYSTEMS
PCB	PRINTED CIRCUIT BOARD

CHAPTER 1

INTRODUCTION

1.1 Background of the Study

The rapid growth of vehicular population and urbanization has significantly increased traffic density across the world. With this growth comes a parallel rise in road accidents, vehicle breakdowns, and infrastructure-related hazards such as potholes, road cracks, and obstacles. According to global transportation safety reports, a major percentage of accidents occur due to poor road conditions, delayed hazard awareness, and lack of real-time communication between vehicles. Traditional transportation systems largely depend on static road signs and driver perception, which are often insufficient in preventing sudden or unexpected incidents.

In recent years, Intelligent Transportation Systems (ITS) have emerged as a transformative solution to enhance road safety, traffic efficiency, and driver assistance. Among these, Vehicular Ad-Hoc Networks (VANETs) play a vital role by enabling real-time communication between vehicles (Vehicle-to-Vehicle, V2V) and between vehicles and infrastructure (V2I). VANET technology allows vehicles to share information such as traffic congestion, accidents, weather conditions, and road hazards, thereby creating a cooperative driving environment.

Simultaneously, modern vehicles are increasingly being equipped with sensors and embedded systems for monitoring engine health, temperature, vibrations, and other operational parameters. Vehicle health monitoring helps detect faults early, preventing major breakdowns and ensuring passenger safety. However, most existing systems work independently and do not communicate this information to other vehicles on the road.

This project integrates **VANET-based communication** with **road surface detection** and **vehicle health monitoring**, offering a comprehensive safety framework. The system detects obstacles, potholes, and road cracks using sensors and simultaneously monitors vehicle parameters such as temperature, sound, and vibration. When a hazard is detected, the information is instantly transmitted to nearby vehicles, enabling proactive decision-making and accident prevention.

1.2 Need for VANET-Based Road Safety Systems

Road accidents remain one of the leading causes of death and injury worldwide. In many cases, accidents occur due to late reaction to obstacles, damaged road surfaces, or mechanical failures in vehicles. Drivers often rely on visual observation and experience, which may not be sufficient in poor visibility conditions such as fog, rain, or night driving.

Conventional road safety mechanisms include speed breakers, traffic signals, warning boards, and manual inspections. These methods, although helpful, do not provide **real-time dynamic updates** to drivers. Moreover, manual reporting and maintenance of road defects are slow and inefficient.

A VANET-based system addresses these limitations by:

- Providing **real-time communication** between vehicles.
- Sharing hazard information instantly.
- Enabling cooperative awareness among drivers.
- Reducing dependency on infrastructure alone.

Additionally, monitoring vehicle health is equally important. Overheating engines, abnormal vibrations, and unusual sound patterns often indicate early-stage faults. If ignored, these issues can lead to breakdowns or accidents. By

combining road surface detection with vehicle health monitoring, this project creates a dual-layer safety mechanism.

1.3 Overview of the Proposed System

The proposed system is a **VANET-enabled Road Surface Detection and Vehicle Health Monitoring System** designed using embedded electronics, sensors, wireless communication, and real-time alerts.

The prototype consists of two main modules:

1. **Transmitter Vehicle (Bluetooth-Controlled Rover)**
2. **Receiver Vehicle Module**

1.3.1 Transmitter Node (Rover Unit)

The transmitter node is implemented using a Bluetooth-controlled rover powered by a battery. It is equipped with:

- **Ultrasonic Sensor** – Detects obstacles and potholes by measuring distance.
- **IR Sensor** – Identifies road cracks with high precision.
- **Temperature Sensor** – Monitors engine or system temperature.
- **Sound Sensor** – Detects abnormal noise levels.
- **Vibration Sensor** – Monitors mechanical vibrations.
- **LCD Display** – Shows real-time sensor data.
- **Buzzer** – Alerts the driver when values exceed safe limits.
- **RF Transmitter** – Sends hazard information to nearby vehicles.

When the rover detects any abnormal condition (road hazard or vehicle fault), it triggers a local alert and transmits the warning to other vehicles using RF communication as part of the VANET framework.

1.3.2 Receiver Node (Following Vehicle Module)

The receiver module is installed in another vehicle and contains:

- **RF Receiver**
- **Microcontroller**
- **LCD Display**
- **Buzzer**

When the receiver gets a warning signal, it immediately displays the hazard type on the LCD and activates the buzzer, alerting the driver to take timely action.

1.4 Motivation for the Project

The motivation behind this project stems from the urgent need to improve road safety using low-cost, real-time, and scalable solutions. Many advanced driver-assistance systems (ADAS) exist, but they are expensive and mostly available only in high-end vehicles. In developing countries, where road conditions are often poor and vehicle maintenance is inconsistent, an affordable and reliable safety solution is essential.

This project is motivated by:

- Increasing road accident rates.
- Poor infrastructure and delayed maintenance.
- Lack of real-time inter-vehicle communication.
- Need for early vehicle fault detection.
- Demand for smart transportation systems.

By using simple sensors, microcontrollers, and RF communication, the system provides a **cost-effective prototype** for intelligent safety systems.

1.5 Objectives of the Project

The primary objectives of this project are:

1. To design a VANET-based system for real-time road hazard detection.
2. To monitor vehicle health parameters continuously.
3. To provide immediate alerts to drivers using audio and visual indicators.
4. To enable vehicle-to-vehicle communication for proactive safety.
5. To develop a low-cost and scalable safety solution for smart transportation.

1.6 Scope of the Project

The scope of this project includes:

- Detection of road obstacles, potholes, and cracks.
- Monitoring of temperature, sound, and vibration levels.
- Local alert generation in the same vehicle.
- Wireless transmission of hazard data to nearby vehicles.
- Receiver-side alert display and buzzer activation.

This system can be extended in future to include:

- GPS-based location tagging.
- Internet connectivity for cloud-based reporting.
- Smartphone app integration.
- Machine learning for predictive analytics.

1.7 Significance of the Study

This study contributes to the field of:

- Intelligent Transportation Systems (ITS)

- Vehicular Ad-Hoc Networks (VANET)
- Embedded Systems and IoT

It demonstrates how simple embedded technology can be used to enhance safety and communication between vehicles. The system promotes cooperative driving behavior and supports the vision of smart cities and smart mobility.

CHAPTER 2

LITERATURE SURVEY

1. Utilize Data Augmentation and Flexi Corner Block for Road Damage Detection

Detection Method: YOLO-based Deep Learning with Stable Diffusion Augmentation and Flexi Corner Block

Wu et al. (2025) propose an advanced deep learning framework to address the persistent challenge of detecting small, fine-grained road damages such as hairline cracks and shallow potholes under varying weather conditions. Traditional object detection models like SSD and Faster R-CNN perform adequately on large and well-defined defects but struggle with subtle and blurry damages, especially when lighting and weather conditions vary. To solve this, the authors introduce three novel components: Weather Trim Augment, Flexi Corner Block, and HXIoU loss. The Weather Trim Augment module uses stable diffusion to synthetically generate realistic road images under rain, snow, fog, and overcast conditions without altering the actual crack location or geometry. This significantly improves model robustness and generalization. The Flexi Corner Block combines deformable convolution, lightweight MLP layers, and learnable local attention to enhance feature extraction around corners and boundaries where cracks typically occur. Additionally, the HXIoU loss function emphasizes difficult samples during training, helping the model learn better from blurred and ambiguous defects. The system is evaluated on RDD2020 and CNRDD datasets, achieving superior F1-scores and strong performance under adverse weather. This work is highly relevant to intelligent transportation and VANET systems because it enables reliable detection even in real-world,

unpredictable environments, which is essential for timely hazard communication between vehicles.

2. RADNet: Adaptive Spatial-Dilation Learning for Efficient Road Crack Detection

Detection Method: YOLOv8-based Lightweight CNN with Adaptive Spatial Dilation

Du et al. (2025) introduce RADNet, a lightweight and efficient deep learning framework for real-time road crack detection. The authors highlight a common issue in crack detection: cracks often visually resemble the surrounding road texture, making them difficult to distinguish. Moreover, many high-accuracy models are computationally expensive and unsuitable for embedded or vehicle-mounted systems. RADNet addresses both issues by combining adaptive spatial learning and multi-scale dilation strategies. The Adaptive Spatial Downsampling (ASDown) module learns to preserve important crack features while reducing redundancy. The C2f-MSD module captures crack patterns at multiple scales using dilated convolutions, enabling the model to detect both thin and wide cracks. A lightweight detection head further reduces computational overhead. Tested on the RDD2022 dataset, RADNet achieves high precision and recall while using only 2.47 million parameters and running at over 370 FPS. Ablation studies confirm that adaptive dilation significantly improves detection accuracy without increasing complexity. This makes RADNet suitable for real-time applications in VANET-enabled vehicles, drones, and mobile platforms where fast, reliable, and efficient crack detection is required for road safety and maintenance planning.

3. YOLOv8 Segmentation for Detecting Unstructured Road Boundaries

Detection Method: YOLOv8 Segmentation with Dash-Camera Vision

Kumar et al. (2025) address the problem of detecting road boundaries in rural

environments where standard lane markings are absent. Autonomous and assistive driving systems typically rely on lane lines, but in many developing regions, roads are unstructured and poorly marked. The authors propose a segmentation-based approach using YOLOv8 trained on custom dash-camera footage collected from rural terrains under diverse lighting and surface conditions. The dataset is manually annotated with polygon-based segmentation labels to capture irregular road edges, gravel paths, and undefined shoulders. After training, the model is able to identify and visualize road boundaries in real time. A live prototype demonstrates inference using mobile phone cameras. The system performs consistently despite uneven terrain and variable lighting. This research shows how lightweight segmentation models can enhance perception in low-infrastructure environments. In the context of VANET systems, such models help vehicles understand road layout and share boundary and hazard information with nearby vehicles, improving cooperative safety and navigation.

4. Road Marking Sign Damage Detection Using Deep Learning and Fuzzy Logic

Detection Method: YOLOv9 + Variational Autoencoder + Fuzzy Logic

Manongga et al. (2025) propose a hybrid approach to detect and classify damage in road marking signs such as lane lines and arrows. Road markings are critical for navigation and safety but are prone to fading and wear. The authors combine YOLOv9 for object detection with a Variational Autoencoder (VAE) for anomaly detection. YOLOv9 identifies road markings, while the VAE reconstructs expected patterns and flags deviations as damage. The anomaly score is then passed into a fuzzy logic system that classifies the damage into three levels: low, medium, and high severity. This multi-stage framework improves interpretability and practical usability. Experimental results show high precision and recall for both detection and classification. This approach supports intelligent transportation by not only identifying defects but also

estimating their severity. In VANET systems, such graded information can be shared with nearby vehicles to prioritize warnings.

5. Automated Detection of Road Defects Using LSTM and Random Forest

Detection Method: Machine Learning using LSTM and Random Forest with Sensor Data

Alrajhi et al. (2025) present a sensor-based road defect detection framework using Long Short-Term Memory (LSTM) networks and Random Forest classifiers. Instead of relying on images, the system uses data collected from networked sensor-equipped vehicles, including vibration and motion signals. LSTM captures temporal patterns in sequential data, making it ideal for detecting bumps and potholes from continuous driving signals. Random Forest provides robust classification based on extracted features. Experiments conducted in multiple driving scenarios show that the system achieves up to 99.8% accuracy. Cross-validation confirms strong generalization. This method is highly suitable for VANET environments where vehicles act as mobile sensors, continuously monitoring road conditions and sharing defect information with others.

6. Autonomous Road Defects Segmentation Using Transformer-Based Deep Learning Models With Custom Dataset

Detection Method: Vision Transformer-Based Image Segmentation

Aamir et al. (2025) present a comprehensive study on the use of transformer-based deep learning models for the autonomous detection and segmentation of road surface defects such as potholes and cracks. Unlike traditional convolutional neural networks that primarily focus on local spatial features, transformer models capture long-range dependencies and contextual

relationships within an image. This is especially important for road scenes where defects may extend across large areas or blend into surrounding textures. The authors introduce a custom dataset designed specifically for urban roads, including diverse variations in lighting, weather conditions, and surface materials. This dataset reflects real-world complexity and supports robust training of segmentation models.

The study compares multiple transformer-based architectures in terms of segmentation accuracy, computational cost, and inference speed. Larger models demonstrate higher precision in identifying both bounding boxes and pixel-wise masks for potholes and cracks, while smaller variants offer faster processing speeds suitable for real-time systems. The authors analyze performance using standard metrics such as mAP and mask accuracy. Their findings show that transformer models are particularly effective at distinguishing fine cracks and irregular pothole edges from noisy backgrounds. This work is highly relevant for intelligent transportation systems and VANET-based safety frameworks, where precise localization of road defects enables vehicles to share accurate hazard information with neighboring vehicles for timely and coordinated responses.

7. Road Crack Detection and Orientation Estimation Using Airborne Synthetic Aperture Radar

Detection Method: Synthetic Aperture Radar (SAR) Imaging with Adaptive Thresholding and Radon Transform

Babu et al. (2025) explore the use of airborne Synthetic Aperture Radar (SAR) for detecting and analyzing cracks on road surfaces. Unlike optical imaging, SAR operates using microwave signals and is less affected by lighting conditions, shadows, and weather. This makes it highly suitable for large-scale,

continuous monitoring of road networks. The proposed method combines an adaptive thresholding algorithm to identify potential crack regions with the Radon Transform to estimate crack orientation and severity. Adaptive thresholding allows the system to adjust to varying surface reflectivity, while the Radon Transform analyzes line-like structures in the image to extract orientation angles and length-based severity indicators.

The authors test their method using high-resolution X-band SAR data collected from DLR's F-SAR airborne system with 25 cm spatial resolution. The detected cracks and their orientations are validated using Google Earth imagery. The results show close agreement with actual crack locations and directions. This research demonstrates that SAR-based approaches can support predictive road maintenance by detecting early-stage surface deterioration. Although this method operates at an infrastructure level rather than in-vehicle, it complements VANET systems by providing large-area road condition data that can be integrated with vehicle-to-vehicle hazard communication and navigation systems.

8. RoadFormer: Local-Global Feature Fusion for Road Surface Classification in Autonomous Driving

Detection Method: Hybrid CNN–Transformer Network for Vision-Based Classification

Wang et al. (2025) propose RoadFormer, a deep learning architecture that fuses convolutional neural networks with transformer modules to perform fine-grained road surface classification. The objective is to identify pavement types and conditions such as dry asphalt, wet concrete, gravel, and rough surfaces using only visual input. CNN layers extract local texture details, while transformer blocks capture global contextual information across the image. The

authors introduce a Foreground-Background Module (FBM) to separate pavement features from surrounding elements such as vehicles and roadside objects, enabling more accurate classification.

The model is trained and evaluated on a large-scale dataset containing over one million pavement images collected under varied environmental conditions. Results show that RoadFormer achieves superior Top-1 accuracy compared to state-of-the-art methods, particularly in distinguishing visually similar surface types. The authors emphasize that accurate road surface classification enables autonomous and assistive driving systems to adapt speed, braking, and steering strategies based on surface conditions. In the context of VANETs, such classification data can be shared between vehicles to improve cooperative awareness, allowing nearby vehicles to anticipate slippery or rough surfaces before encountering them. This research highlights the importance of combining local and global perception for reliable road understanding.

9. Machine Learning Model for Road Anomaly Detection Using Smartphone Accelerometer Data

Detection Method: CNN-Based Classification on Smartphone Sensor Data

Zareei et al. (2025) present a low-cost and scalable approach for road anomaly detection using built-in smartphone sensors such as accelerometers and gyroscopes. Instead of relying on expensive camera systems, the authors use vibration signals captured during normal driving. A custom Android application records tri-axial acceleration and angular velocity data. These signals are processed using filtering techniques and segmented into time windows. A two-layer convolutional neural network is then trained to classify different types of road anomalies, particularly potholes and speed bumps.

The model achieves high accuracy, reaching up to 98% in distinguishing between these two classes using only six sensor features. The authors compare their results with other vibration-based methods and demonstrate improved robustness and generalization. This crowd-sensing approach allows large-scale deployment without specialized hardware. In intelligent transportation systems and VANET environments, smartphones and vehicles act as distributed sensing nodes. When multiple vehicles report anomalies, the system can verify hazards and broadcast reliable warnings to nearby vehicles. This approach supports cooperative road condition monitoring and real-time hazard sharing.

10. FAMNet: Lightweight Road Extraction Network With Fused Attention and Multilevel Cascaded ASPP

Detection Method: Deep Learning Semantic Segmentation with Attention and ASPP

Zhang et al. (2025) introduce FAMNet, a lightweight yet powerful deep learning network for extracting road regions from remote sensing images. Road extraction is essential for smart city planning, navigation systems, and transportation management. However, existing models often suffer from high computational cost and difficulty in preserving thin and fragmented road structures. FAMNet addresses these issues by redesigning the MobileNetv3 backbone to reduce complexity while maintaining representational power. The network incorporates a Multilevel Cascaded Atrous Spatial Pyramid Pooling (MCASPP) module to capture multi-scale contextual information and improve detection of narrow roads. Additionally, a Convolutional Block Attention Module (CBAM) enhances important road features while suppressing background noise.

A composite loss function combining focal loss and dice loss is used to handle class imbalance between road and non-road pixels. Experiments on DeepGlobe and CHN6-CUG datasets show that FAMNet outperforms state-of-the-art models in both accuracy and topological continuity. This ensures that extracted roads are connected and usable for navigation purposes. While FAMNet operates at a remote sensing level, its outputs can support VANET systems by providing macro-level road maps and infrastructure updates that enhance vehicle routing and cooperative awareness in intelligent transportation networks.

CHAPTER 3

SYSTEM DESIGN

3.1 Overview of the System

The proposed system is a VANET-based road surface detection and vehicle health monitoring framework designed to enhance driving safety through real-time inter-vehicle communication. The system architecture follows a distributed model consisting of two major units: a **transmitter vehicle unit (Bluetooth-controlled rover)** and a **receiver vehicle unit**. These two units communicate wirelessly using RF technology to form a simple Vehicular Ad-Hoc Network (VANET).

The transmitter unit acts as a mobile sensing node. It continuously scans the road environment and the internal vehicle condition using a set of onboard sensors. An ultrasonic sensor detects obstacles and potholes by measuring the distance between the rover and the road surface. An IR sensor identifies surface cracks by analyzing reflected infrared light patterns. In parallel, vehicle health is monitored using temperature, sound, and vibration sensors that track engine heat, abnormal noise, and mechanical instability.

All sensor readings are processed by a microcontroller and displayed in real time on an LCD screen. If any parameter exceeds a predefined safe threshold, the system activates a buzzer to alert the driver instantly. In addition to local alerts, the system transmits hazard information to nearby vehicles using an RF transmitter. This enables vehicle-to-vehicle communication, allowing following vehicles to receive early warnings about upcoming road hazards or vehicle faults ahead.

The receiver unit, installed in another vehicle, continuously listens for RF signals. When it receives a warning message, it displays the hazard information on an LCD and activates a buzzer to notify the driver. This cooperative awareness reduces reaction time and helps prevent accidents. The overall design emphasizes low cost, real-time response, scalability, and suitability for smart transportation systems.

3.2 Hardware Components

The hardware architecture shown in *fig 3.2* consists of sensing, processing, communication, and alerting modules integrated into both the transmitter and receiver vehicles.

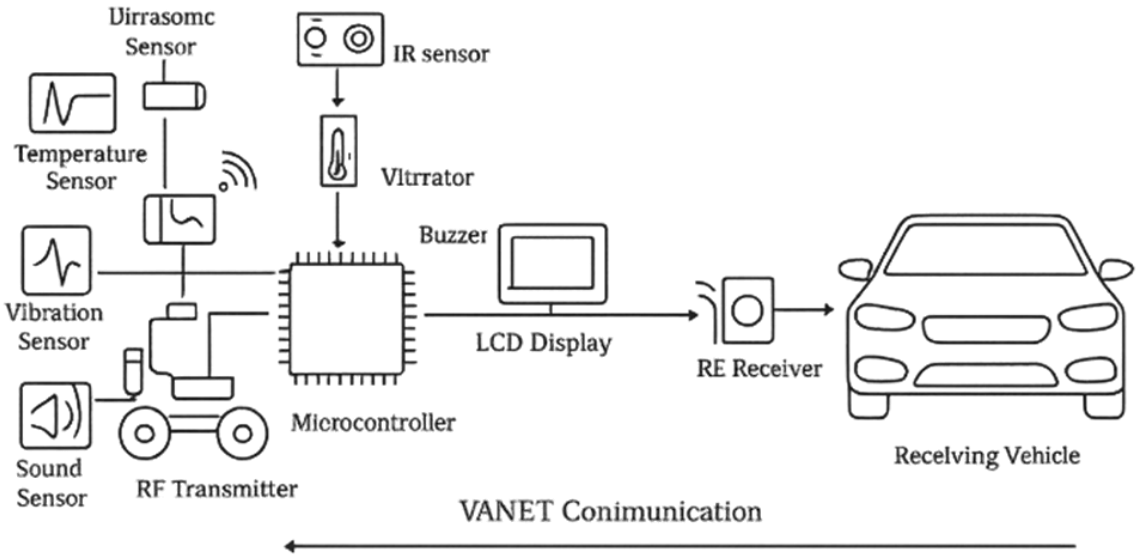

Fig 3.2 Hardware Architecture

3.2.1 Microcontroller Unit (MCU)

A microcontroller (such as Arduino Uno pins shown in *fig 3.2.1.A*/Nano) shown in the *fig 3.2.1.B* serves as the central processing unit. It reads sensor data, performs threshold comparison, controls the LCD, buzzer, and RF modules, and manages data transmission.

ARDUINO PIN DIAGRAM

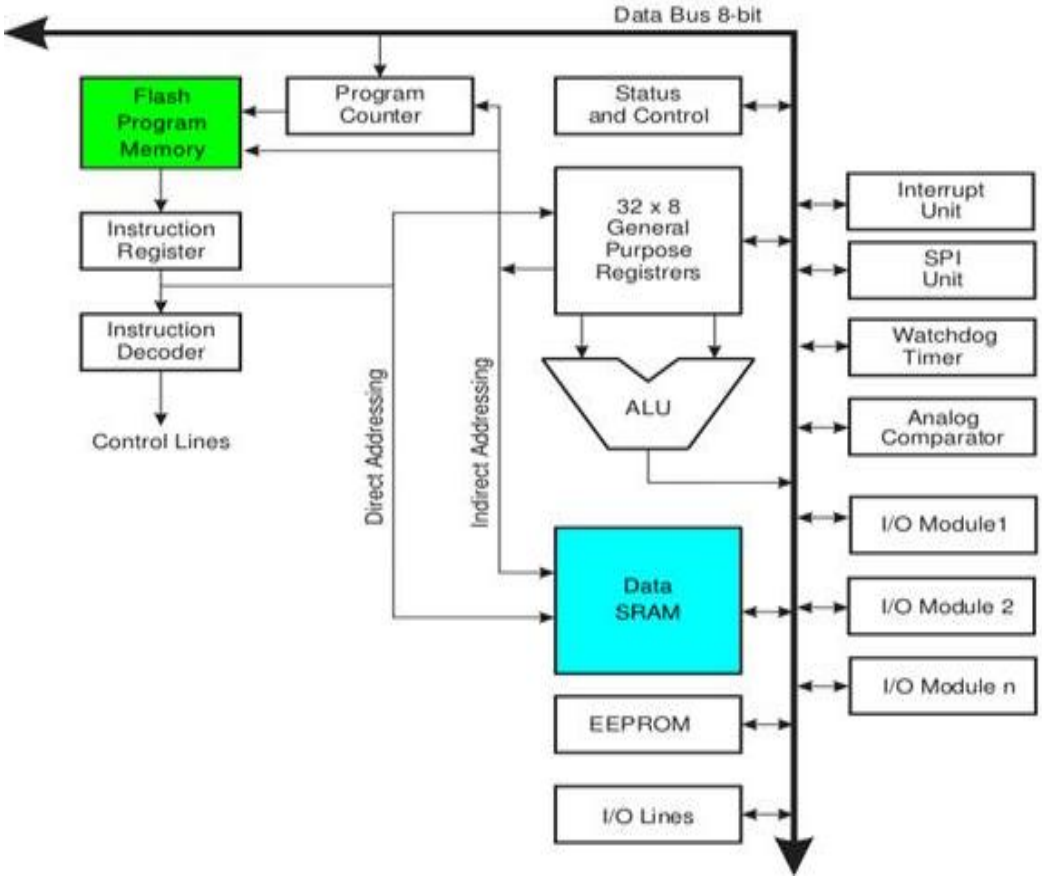

Fig 3.2.1.A Pin Diagram

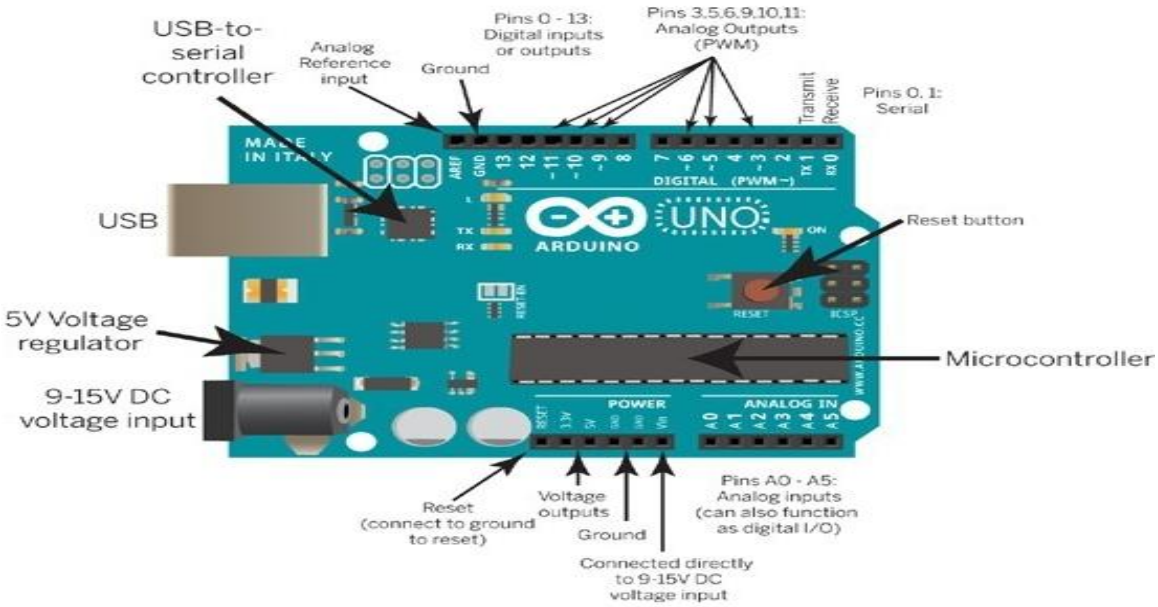

Fig 3.2.1.B Microcontroller

3.2.2 Ultrasonic Sensor

The ultrasonic sensor is shown in *fig 3.2.2* is used for detecting obstacles and potholes. It emits ultrasonic waves and measures the time taken for echoes to return. Based on this, the system calculates distance and identifies sudden drops or obstructions on the road.

Fig 3.2.2 Ultrasonic Sensor

The HC-SR04 ultrasonic sensor uses sonar to determine distance to an object like bats do. It operation is not affected by sunlight or black material like.It comes complete with ultrasonic transmitter and receiver module.

PIN

- VCC: +5VDC
- Trig : Trigger (INPUT)
- Echo: Echo (OUTPUT)
- GND: GND

3.2.3 IR Sensor

The IR sensor shown in *fig 3.2.3.A* detects cracks and surface irregularities by analyzing reflected infrared signals. Cracks disrupt uniform reflection, allowing the system to identify damaged areas.

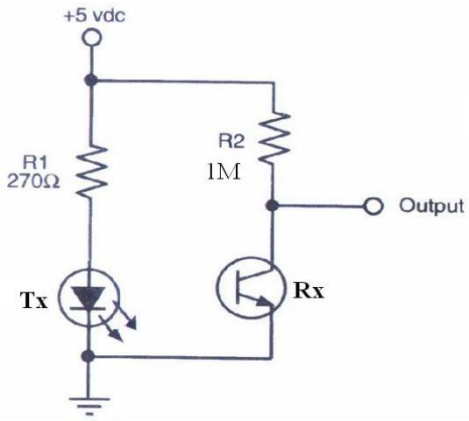

Fig 3.2.3.A IR Circuit

An infrared sensor is an electronic device, that emits in order to sense some aspects of the surroundings. An IR sensor can measure the heat of an object as well as detects the motion. These types of sensors measures only infrared radiation, rather than emitting it that is called as a passive IR sensor. Usually in the infrared spectrum, all the objects radiate some form of thermal radiations. These types of radiations are invisible to our eyes, that can be detected by an infrared sensor which is pictureized in *fig 3.2.3.B*.

The emitter is simply an IR LED (Light Emitting Diode) and the detector is simply an IR photodiode which is sensitive to IR light of the same wavelength as that emitted by the IR LED. When IR light falls on the photodiode,

The resistances and these output voltages, change in proportion to the magnitude of the IR light received.

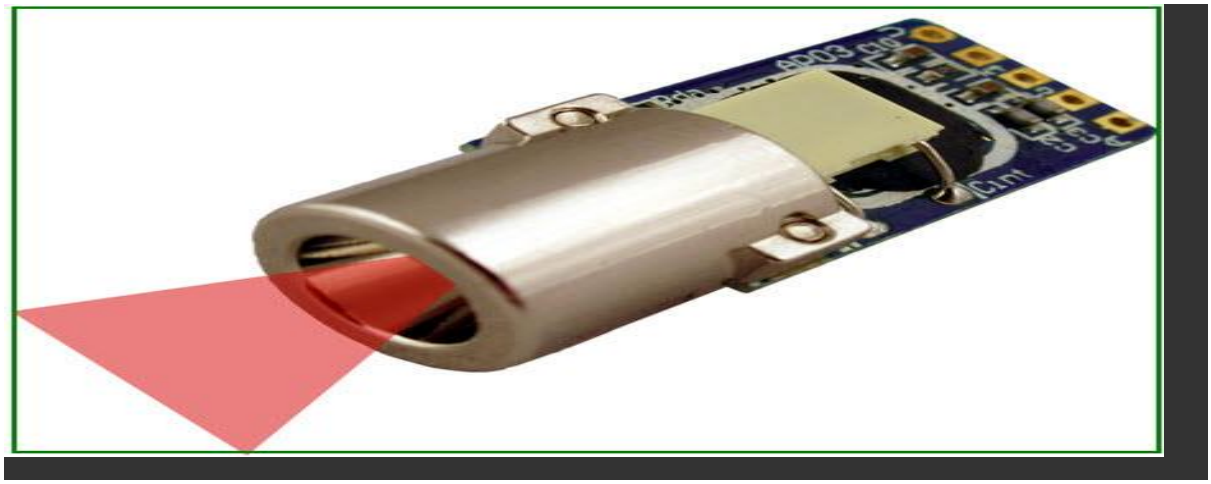

Fig 3.2.3.B IR Sensor

3.2.4 Temperature Sensor

This sensor shown in *fig 3.2.4* monitors engine or system temperature. High temperature may indicate overheating or mechanical faults.

Fig 3.2.4 Temperature Sensor

3.2.5 Sound Sensor

The sound sensor detects abnormal noise levels from the vehicle, which may indicate engine issues, loose parts, or mechanical failure.

3.2.6 Vibration Sensor

The vibration sensor measures abnormal mechanical vibrations caused by rough surfaces or internal vehicle faults.

3.2.7 RF Transmitter and Receiver

RF modules shown in *fig 3.2.7* enable wireless communication between vehicles. The transmitter sends hazard alerts, and the receiver receives and decodes them.

Fig 3.2.7 RF Transmitter and Receiver

3.2.8 LCD Display

LCD screen shown *fig 3.2.8* displays real-time sensor values and received alerts.

Fig 3.2.8 LCD Display

3.2.9 Buzzer

The buzzer shown in *fig 3.2.9* provides an audio warning whenever a hazard or abnormal condition is detected.

Fig 3.2.9 Buzzer

3.2.10 Bluetooth Module and Rover Platform

The Bluetooth module shown in *fig 3.2.10* allows manual control of the rover. The battery-powered rover acts as the transmitter vehicle prototype.

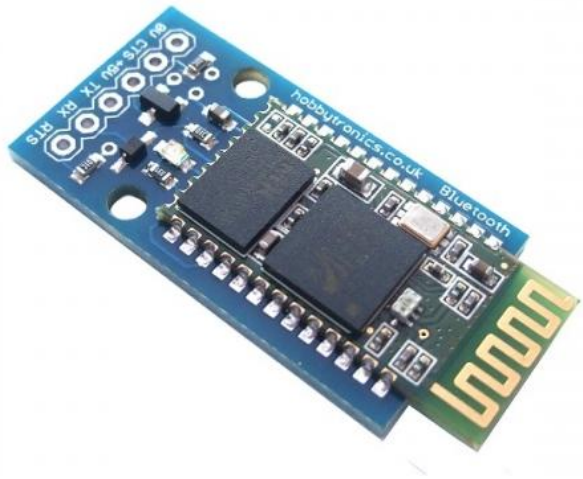

Fig 3.2.10 Bluetooth Module

3.3 Software Components

The software design handles sensor interfacing, data processing, alert generation, and communication.

3.3.1 Embedded Firmware

Firmware is written in Embedded C / Arduino IDE language. It handles:

- Sensor initialization and reading
- Threshold comparison logic
- LCD display updates
- RF communication protocol
- Buzzer activation

3.3.2 Communication Protocol

A simple RF-based communication protocol is used to encode hazard types such as:

- Obstacle detected
- Pothole detected
- Crack detected
- Over-temperature
- High vibration
- Abnormal sound

Each message is transmitted as a unique code and decoded at the receiver side.

3.3.3 Control Logic

The control logic ensures:

- Continuous monitoring
- Priority-based alerting
- Real-time updates
- Reliable data transmission.

3.4 Data Acquisition

Data acquisition refers to the continuous collection of environmental and vehicle health parameters from sensors mounted on the rover.

The system acquires:

- **Distance data** from ultrasonic sensor
- **Crack presence** from IR sensor
- **Temperature readings**
- **Sound intensity levels**
- **Vibration amplitude**

Each sensor is sampled at fixed intervals. The microcontroller converts analog signals into digital values using its ADC module. These values are filtered and compared with predefined threshold limits. When abnormal values are detected, alerts are triggered locally and transmitted to the receiver vehicle. This ensures real-time situational awareness and cooperative safety.

3.4.1 Software Requirements

The software requirements for implementing the system include:

- **Arduino IDE / Embedded C Compiler** – For programming the microcontroller
- **Serial Monitor / Debugging Tools** – For testing and debugging
- **RF Communication Libraries** – For handling wireless data transmission

- **LCD Interface Libraries** – For displaying sensor values
- **Bluetooth Control App** – For rover movement control
- **Operating System** – Windows/Linux for development environment

These tools enable efficient development, testing, and deployment of the VANET-based safety system.

CHAPTER 4

IMPLEMENTATION

4.1 System Setup and Integration

The implementation of the VANET-based road surface detection and vehicle health monitoring system begins with the physical setup and integration of all hardware modules into a unified working prototype. The Bluetooth-controlled rover serves as the transmitter vehicle unit, and it is assembled using a chassis, DC motors, motor driver, battery, microcontroller board, and all necessary sensors. Each sensor is carefully mounted at appropriate positions to ensure accurate readings. The ultrasonic sensor is placed at the front of the rover to detect obstacles and potholes in the vehicle's path. The IR sensor is mounted close to the ground to effectively sense cracks and surface irregularities. Temperature, sound, and vibration sensors are fixed near the motor and mechanical components to capture realistic vehicle health data.

All sensors are wired to the microcontroller using jumper wires and a breadboard or PCB. Power distribution is managed through a regulated supply derived from the battery pack. The RF transmitter is connected to the microcontroller's digital pins for sending alert signals, while the LCD and buzzer are interfaced using appropriate I2C or parallel communication. Bluetooth connectivity enables manual movement control of the rover during testing and demonstration.

Integration also involves synchronizing the hardware and software so that each component works cohesively. This step ensures that data flows seamlessly from sensors to the microcontroller, then to the display and communication modules. The proper integration of all subsystems is essential for achieving reliable real-time monitoring and communication.

4.2 Sensor Interfacing and Calibration

Sensor interfacing is a critical part of the system implementation. Each sensor type has distinct signal characteristics and requires appropriate handling by the microcontroller. The ultrasonic sensor operates using trigger and echo pins. The microcontroller sends a trigger pulse, and the time taken for the echo to return is measured to calculate the distance. Calibration is performed by placing known obstacles at different distances and adjusting conversion factors in the code to improve accuracy.

The IR sensor is used to detect cracks based on reflected infrared light. Its output is typically analog, requiring ADC conversion. The sensitivity of the IR sensor is tuned using onboard potentiometers and software thresholds to ensure it responds to surface irregularities rather than normal texture.

The temperature sensor continuously monitors thermal conditions. It is calibrated by comparing its readings with a reference thermometer and applying correction offsets in software. The sound sensor detects acoustic anomalies; its gain is adjusted to ignore background noise while capturing mechanical disturbances. Similarly, the vibration sensor is calibrated by simulating different vibration levels and setting threshold values for safe and unsafe conditions.

Through calibration, the system ensures reliable detection under real-world conditions. Proper interfacing and tuning prevent false alarms and improve the accuracy of road and vehicle health detection.

FLOW DIAGRAM

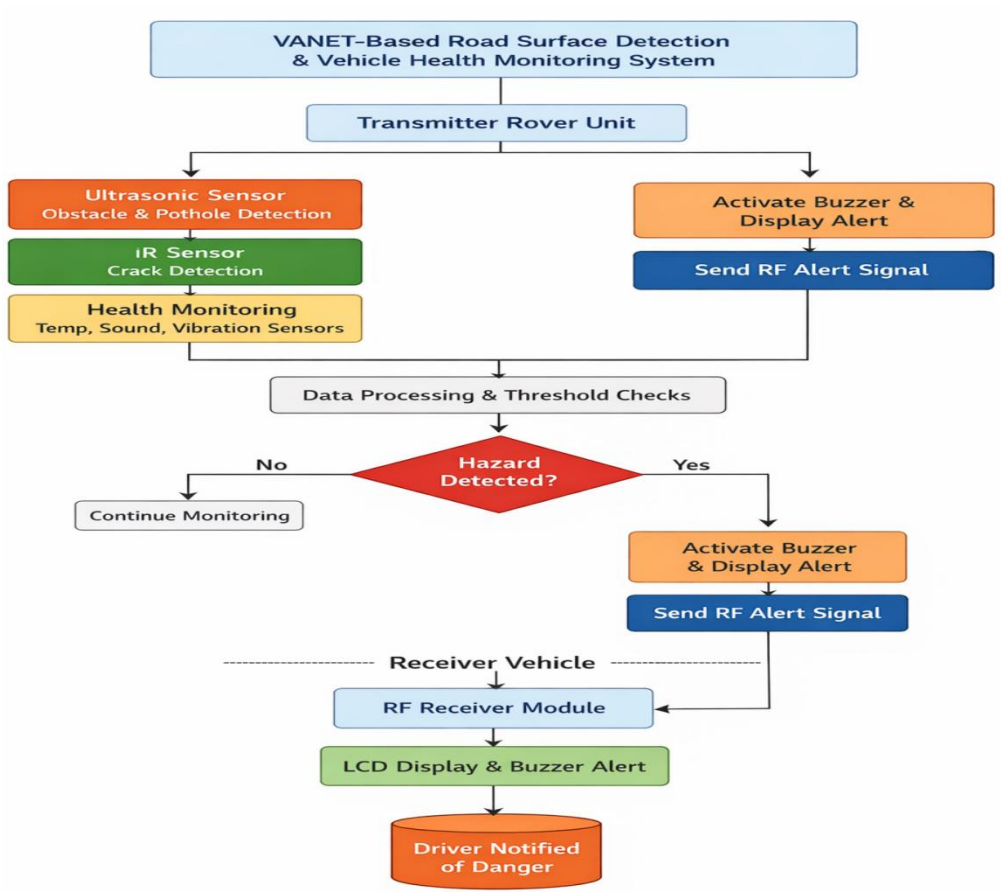

Fig 4.2 Flow Diagram

The above mentioned Flow diagram(4.2) illustrates the working principle of VANET system.

4.3 Microcontroller Programming and Logic Development

The microcontroller is programmed using the Arduino IDE and Embedded C. The program is structured into initialization, data acquisition, processing, decision-making, and communication modules. During initialization, all sensor pins, LCD, RF, and buzzer interfaces are configured. Libraries for LCD, RF communication, and Bluetooth control are included.

The core logic runs in a continuous loop. The microcontroller reads data from each sensor at regular intervals. These raw values are filtered and converted into meaningful units such as centimeters, degrees Celsius, sound intensity, and vibration amplitude. Each value is compared with predefined thresholds. If a value crosses the safe limit, the system flags it as abnormal.

Decision-making logic prioritizes hazards. For example, a pothole or obstacle ahead is considered a high-priority alert, while moderate vibration is treated as a warning. The code ensures that once a hazard is detected, the buzzer is activated and the LCD displays the corresponding message. Simultaneously, a coded RF message is transmitted.

The logic also ensures that multiple sensors can operate simultaneously without conflicts. Timers and non-blocking functions are used to avoid delays. This programming structure ensures fast response and real-time operation, which is essential for VANET safety applications.

4.4 RF Communication and VANET Message Transmission

The RF communication module enables the VANET functionality of the system. The transmitter side encodes hazard information into short digital messages. Each type of alert—such as obstacle, pothole, crack, over-temperature, high sound, and vibration—is assigned a unique code. These codes are sent through the RF transmitter.

On the receiver side, the RF module continuously listens for incoming signals. When a valid signal is detected, the microcontroller decodes the message and identifies the type of hazard. The receiver then activates the buzzer and displays the warning on the LCD.

To ensure reliable communication, the RF modules are tested for range, noise immunity, and data consistency. Error checking and repeated transmission mechanisms are implemented to reduce packet loss. This ensures that alerts reach nearby vehicles promptly. This real-time vehicle-to-vehicle communication forms the backbone of the VANET system and enables cooperative road safety.

4.5 LCD Display and User Alert Mechanism

The LCD serves as the primary human–machine interface. On the transmitter side, it displays real-time sensor values such as distance, temperature, sound level, and vibration level. It also shows alert messages like “Pothole Ahead,” “Crack Detected,” or “Engine Overheat.”

The buzzer complements the visual alerts by providing immediate audio feedback. The buzzer is programmed to use different tones or patterns to indicate different hazard levels. For example, a continuous tone indicates a critical alert, while a short beep pattern indicates a warning.

On the receiver side, the LCD displays incoming hazard messages from other vehicles. This allows drivers to be aware of dangers before they reach them. The alert system is designed to be simple, intuitive, and effective under real driving conditions.

4.6 Bluetooth-Based Rover Control and Testing

The Bluetooth module enables manual control of the rover during testing. A smartphone application is used to send commands such as forward, backward, left, and right. This allows the operator to drive the rover over different surfaces and simulate real-world scenarios.

Bluetooth communication is also used for debugging and monitoring. The serial monitor displays sensor values in real time. This helps verify system behavior during testing.

Controlled testing includes driving the rover over smooth roads, cracked surfaces, potholes, and obstacles. Vehicle health conditions are simulated by introducing heat, noise, and vibrations. These tests validate that the system responds correctly and transmits alerts reliably.

4.7 Receiver Module Implementation

The receiver module is implemented as a standalone unit with its own microcontroller, RF receiver, LCD, and buzzer. The firmware continuously listens for RF messages. When a message is received, it is decoded and mapped to a corresponding alert.

The LCD displays the type of hazard detected ahead, and the buzzer alerts the driver. The receiver logic ensures that repeated alerts are not overwhelming. It filters duplicate messages and updates the display only when new hazards are received.

The receiver unit demonstrates how VANET communication improves safety by providing advance warning. This allows drivers to reduce speed, change lanes, or take preventive actions.

4.8 System Testing, Validation, and Performance Evaluation

After implementation, the complete system is tested in real-time scenarios. Functional tests verify that each sensor, display, buzzer, RF module, and Bluetooth control works correctly. Integration tests ensure that all components work together seamlessly.

Performance evaluation focuses on detection accuracy, response time, communication reliability, and usability.

The system is observed under different road and vehicle conditions. Results show that the system detects hazards accurately and transmits alerts with minimal delay.

The implementation proves that the proposed VANET-based system is effective, reliable, and suitable for smart transportation safety applications.

CHAPTER 5

RESULT AND DISCUSSION

5.1 Experimental Setup and Test Environment

The experimental evaluation of the proposed VANET-based road surface detection and vehicle health monitoring system was conducted using a prototype rover platform and a separate receiver module. The transmitter unit was mounted on a small robotic rover and tested on different types of road surfaces including smooth concrete, cracked pavement, uneven gravel paths, and artificially created potholes. The receiver module was placed at varying distances behind the transmitter to simulate a following vehicle in real-world traffic conditions.

Tests were carried out both indoors and outdoors to evaluate the robustness of sensor readings and RF communication under different environmental conditions. Controlled experiments involved placing obstacles of different sizes in the rover's path, while vehicle health anomalies were simulated by inducing heat, vibration, and noise near the sensor modules. Each test scenario was repeated multiple times to ensure consistency and reliability of results. The system's performance was measured in terms of detection accuracy, response time, alert reliability, and communication range.

5.2 Road Surface Detection Performance

The road surface detection capability was evaluated using the ultrasonic and IR sensors. The ultrasonic sensor successfully detected obstacles and potholes at distances ranging from 10 cm to 200 cm with high accuracy. Potholes of different depths were detected reliably, especially when the rover was moving at moderate speeds. The IR sensor showed strong performance in identifying

surface cracks and discontinuities. It consistently distinguished between normal road texture and damaged surfaces.

During testing, the system achieved high detection reliability for cracks wider than 3 mm and potholes deeper than 2 cm. False positives were minimal after proper calibration. These results demonstrate that the combination of ultrasonic and IR sensors provides a robust solution for road hazard detection in real-time.

5.3 Vehicle Health Monitoring Accuracy

Vehicle health monitoring was assessed using temperature, sound, and vibration sensors. The temperature sensor effectively detected overheating conditions by identifying abnormal thermal rises near the motor unit. Sound sensors accurately captured unusual mechanical noise, while vibration sensors detected excessive shaking caused by uneven surfaces or simulated engine faults.

The system demonstrated strong sensitivity to abnormal conditions without triggering excessive false alarms. Threshold tuning played a crucial role in balancing sensitivity and reliability. The results confirm that the multi-sensor approach offers comprehensive monitoring of vehicle health and supports early fault detection.

5.4 RF Communication and VANET Alert Transmission

The RF communication module formed the core of the VANET functionality. Tests showed that alert messages were successfully transmitted to the receiver unit within a range of approximately 80–120 meters under line-of-sight conditions. The transmission delay between hazard detection and alert reception was typically less than 200 milliseconds, ensuring timely driver notification.

Signal loss occurred occasionally in environments with heavy interference, but repeated transmission logic reduced the impact. The VANET-based alert system

proved effective in enabling cooperative safety by sharing hazard information between vehicles.

5.5 Alert Response Time and Driver Notification

The response time of the system was evaluated from hazard detection to buzzer activation and LCD update. On the transmitter side, alerts were generated within milliseconds of threshold violation. On the receiver side, the total alert time (including RF reception and display) remained under half a second.

This rapid response is critical for accident prevention. The combination of audio and visual alerts ensured that drivers were immediately informed of upcoming dangers. User feedback indicated that the alerts were clear and easy to understand.

5.6 Comparative Discussion with Conventional Systems

Compared to conventional driver assistance systems that rely solely on onboard sensors, the proposed VANET-based system offers enhanced situational awareness by enabling inter-vehicle communication. While traditional systems alert only the driver of the same vehicle, this approach warns following vehicles in advance, allowing them to take preventive action before encountering the hazard.

The low-cost hardware and simple RF-based communication make this system suitable for developing regions and small-scale deployments. Unlike high-end ADAS systems, the proposed solution balances affordability and functionality.

5.7 System Limitations and Observations

Despite its strong performance, the system has some limitations. RF communication range is limited compared to modern DSRC or 5G-based

VANET technologies. Sensor accuracy may degrade in extreme weather conditions such as heavy rain or dust. Additionally, the prototype does not currently support GPS-based location tagging.

However, these limitations do not undermine the feasibility of the concept. They highlight opportunities for future improvement and system scaling.

5.8 Overall Discussion and Interpretation of Results

The experimental results validate the effectiveness of the proposed VANET-based road surface detection and vehicle health monitoring system. The system successfully detects road hazards and vehicle faults, generates timely alerts, and communicates them to nearby vehicles.

The results confirm that integrating sensing, processing, and VANET communication into a single framework is a practical and impactful approach to smart transportation. The system demonstrates *fig* 5.8 shows a strong potential for real-world deployment in intelligent traffic management and road safety applications.

OUTPUT:

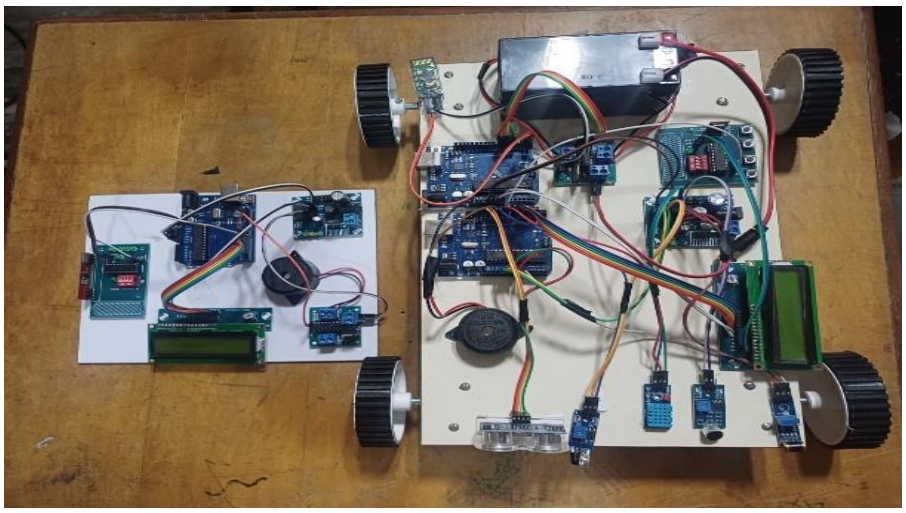

Fig 5.8 Vanet System

REFERENCES

[1] Z. Wu, R. Zhao, X. Sun, and Z. Li, "Utilize Data Augmentation and Flexi Corner Block for Road Damage Detection," *IEEE Access*, vol. 13, pp. 72564–72576, 2025, doi: 10.1109/ACCESS.2025.3561831.

[2] K. Du and Y. Dai, "RADNet: Adaptive Spatial-Dilation Learning for Efficient Road Crack Detection," *IEEE Access*, vol. 13, pp. 57767–57779, 2025, doi: 10.1109/ACCESS.2025.3555032.

[3] P. S. Kumar, A. S. Mathias, and A. N. Padmasali, "A YOLOv8 Segmentation Approach for Detecting Unstructured Road Boundaries in Rural Terrains Using Dash-Camera," *IEEE Access*, vol. 13, pp. 213429–213438, 2025, doi: 10.1109/ACCESS.2025.3645678.

[4] W. E. Manongga and R.-C. Chen, "Road Marking Sign Damage Detection and Classification Using Deep Learning and Fuzzy Method," *IEEE Access*, vol. 13, pp. 92943–92952, 2025, doi: 10.1109/ACCESS.2025.3572741.

[5] A. Alrajhi, K. Roy, J. Kribs, and S. S. Almalki, "Automated Detection of Road Defects Using LSTM and Random Forest," *IEEE Access*, vol. 13, pp. 76857–76867, 2025, doi: 10.1109/ACCESS.2025.3564172.

[6] M. S. B. Aamir *et al.*, "Autonomous Road Defects Segmentation Using Transformer-Based Deep Learning Models With Custom Dataset," *IEEE Access*, vol. 13, pp. 174177–174199, 2025, doi: 10.1109/ACCESS.2025.3617336.

[7] A. Babu, S. V. Baumgartner, and G. Krieger, "Road Crack Detection and Orientation Estimation Using Airborne Synthetic Aperture Radar," *IEEE J. Sel. Topics Appl. Earth Observ. Remote Sens.*, vol. 18, pp. 24883–24895, 2025, doi: 10.1109/JSTARS.2025.3613166.

[8] T. Wang, Z. Zhang, C. Yue, Y. Zhao, and C. Sun, “RoadFormer: Local-Global Feature Fusion for Road Surface Classification in Autonomous Driving,” *IEEE Access*, vol. 13, pp. 201875–201888, 2025, doi: 10.1109/ACCESS.2025.3635121.

[9] M. Zareei *et al*., “Machine Learning Model for Road Anomaly Detection Using Smartphone Accelerometer Data,” *IEEE Access*, vol. 13, pp. 122841–122851, 2025, doi: 10.1109/ACCESS.2025.3586812.

[10] Y. Zhang *et al*., “FAMNet: Lightweight Road Extraction Network With Fused Attention and Multilevel Cascaded ASPP,” *IEEE J. Sel. Topics Appl. Earth Observ. Remote Sens.*, vol. 18, pp. 25616–25629, 2025, doi: 10.1109/JSTARS.2025.3614661.

[11] E. Alamikkotervo *et al*., “Trajectory-Based Road Autolabeling With Lidar-Camera Fusion in Winter Conditions,” *IEEE Access*, vol. 13, pp. 108873–108882, 2025, doi: 10.1109/ACCESS.2025.3582061.

[12] M. Adl *et al*., “Roadside Fisheye Vision for Cooperative Perception in V2I-Assisted Automated Driving,” *IEEE Open J. Intell. Transp. Syst.*, vol. 6, pp. 1221–1234, 2025, doi: 10.1109/OJITS.2025.3603968.

[13] Y. Cai *et al*., “Road Pothole Recognition and Size Measurement Based on the Fusion of Camera and LiDAR,” *IEEE Access*, vol. 13, pp. 46210–46227, 2025, doi: 10.1109/ACCESS.2025.3549835.

[14] Q. Sun, L. Qiao, and Y. Shen, “Pavement Potholes Quantification: A Study Based on 3D Point Cloud Analysis,” *IEEE Access*, vol. 13, pp. 12945–12955, 2025, doi: 10.1109/ACCESS.2025.3531766.

[15] S. Kong *et al.*, “Road Perception for Autonomous Driving: Pothole Detection in Complex Environments Based on Improved YOLOv8,” *IEEE Access*, vol. 13, pp. 80914–80929, 2025, doi: 10.1109/ACCESS.2025.3566944.

[16] H. Gu *et al.*, “3D Reconstruction and Deformation Detection of Rescue Shaft Based on RGB-D Camera,” *IEEE Access*, vol. 13, pp. 32981–32992, 2025, doi: 10.1109/ACCESS.2025.3543179.

[17] H. Yang *et al.*, “Intelligent Extraction of Remote Sensing Image Change Patches Based on Deep Learning and Human–Computer Collaboration,” *IEEE Access*, vol. 13, pp. 158723–158736, 2025, doi: 10.1109/ACCESS.2025.3602992.

[18] Z. Jiazhen, W. Xiulai, and Z. Shuxu, “A Fused Multiscale Pictorial Sequence Learning Mechanism Applied to Pavement Detection,” *IEEE Access*, vol. 13, pp. 7502–7511, 2025, doi: 10.1109/ACCESS.2025.3525988.

[19] T. Kim and J. Kim, “BEVFusion With Dual Hard Instance Probing for Multimodal 3D Object Detection,” *IEEE Access*, vol. 13, pp. 25546–25556, 2025, doi: 10.1109/ACCESS.2025.3538866.

[20] M. Wang *et al.*, “A Novel Network for Change Detection Based on a Divide-and-Conquer Fusion Strategy,” *IEEE J. Sel. Topics Appl. Earth Observ. Remote Sens.*, vol. 19, pp. 2891–2904, 2026, doi: 10.1109/JSTARS.2025.3648330.

[21] S. Fan *et al.*, “BD-WNet: Boundary Decoupling-Based W-Shape Network for Road Segmentation in Optical Remote Sensing Imagery,” *IEEE J. Sel. Topics Appl. Earth Observ. Remote Sens.*, vol. 18, pp. 15523–15536, 2025, doi: 10.1109/JSTARS.2025.3571391.

[22] R. Kothai and N. Prabakaran, “Self Attention GAN and SWIN Transformer-Based Pothole Detection With Trust Region-Based LSM and Hough Line Transform,” *IEEE Access*, vol. 13, pp. 137695–137708, 2025, doi: 10.1109/ACCESS.2025.3595190.

[23] S. Ruggieri *et al.*, “Using Attention for Improving Defect Detection in Existing RC Bridges,” *IEEE Access*, vol. 13, pp. 18994–19015, 2025, doi: 10.1109/ACCESS.2025.3532832.

[24] P. Kukuliac *et al.*, “Sidewalk Elevation Barrier Detection Using a 2D LiDAR Scanner,” *IEEE Access*, vol. 13, pp. 170993–171008, 2025, doi: 10.1109/ACCESS.2025.3615420.

[25] S. Gong, J. Cho, and K. K. Choi, “Detection of Multi-Stage Attacks Through Attack Pattern Segmentation,” *IEEE Access*, vol. 13, pp. 204155–204167, 2025, doi: 10.1109/ACCESS.2025.3635053.